DRG. No.	W33GH000/1
DRG. REF.	

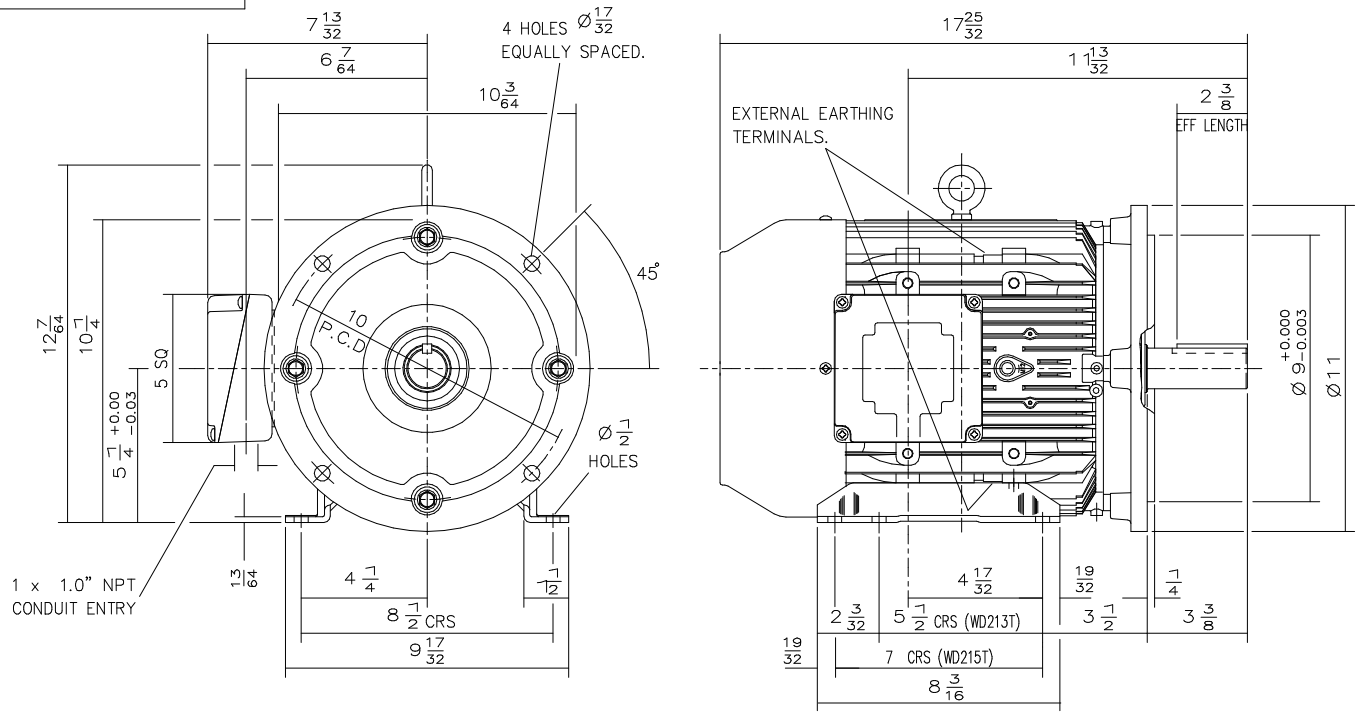

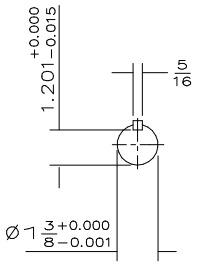

CUSTOMER	
ORDER No.	
PART No.	
OUR ORDER No.	
FRAME SIZE	
KW.	RPM.
Hz	PHASE
VOLTS	POLES
BRGS. DE.	NDE.
MOTOR NETT WT.	Kg.
SPECIAL REMARKS	

ALL DIMENSIONS IN INCHES.

FIRST ANGLE PROJECTION

TERMINAL BOX POSITION:- CAN BE ARRANGED EITHER AT 9,12 OR 3 O'CLOCK BY MOVONG
STANDARD TERMINAL BOX POSITION IS 9 O'CLOCK AS SHOWN.
CONDUIT ENTRIES:- TERMINAL BOX CAN BE ROTATED AT 90° INTERVALS
(CONDUIT POSITION SHOWN FOR ILLUSTRATION ONLY)

BROOK CROMPTON
Huddersfield, HD1 3LJ
ENGLAND

SHEET SIZE	TITLE		NAME	DATE				
A3	OUTLINE DIMENSION DRAWING W ALUMINIUM TOTALLY ENCLOSED FAN COOLED 213/5T FOOT & 'D' INCH FLANGE MOUNTED MOTOR.	DRAWN	MI	29-08-95	DRG. No.	W33GH000/1		
		CHECKED	JWD	29-08-95	DRG. REF.			
		SCALE	1 : 4		REVISION:	DH	DATE	07-07-01